RECTANGULAR POCKET ADJUSTABLE ACCENT LIGHT

1005-3LEDZ-FH-VHO

Triple lamp, solid state light engine, recessed, flanged open slot accent light with nominal 6” x 18” rectangular aperture. Accent and downlighting in low to medium ceiling heights typically found in residential, commercial and retail applications. Suitable for new construction. Can be used in surfaces such as wood, stone, etc.

JOB:

SPECIFIER:

TYPE:

QUANTITY:

SIGNATURE:

SPECIFICATIONS

HOUSING
- Extruded aluminum with bolt on end plates and integral flange

MOUNTING
- Recessed in architectural ceiling

ELECTRICAL
- Integral dimmable electronic driver with internal short circuit protection

LAMP
- (3) Citizen LEDs supplied with fixture

SOCKET
- Precision aluminum yoke with CNC machined lampholder assembly

LENS
- Interchangeable reflector provides multiple beam patterns
- Solite, Veiling Acrylic available as standard. For more options, consult factory

TRIM
- Flanged housing

FINISH
- Powder paint on all surfaces in black and white as standard
- Additional colors and RAL palette available
- Consult factory for custom finishes

LABELS
- C US, US tested to UL standards 1598, Damp location

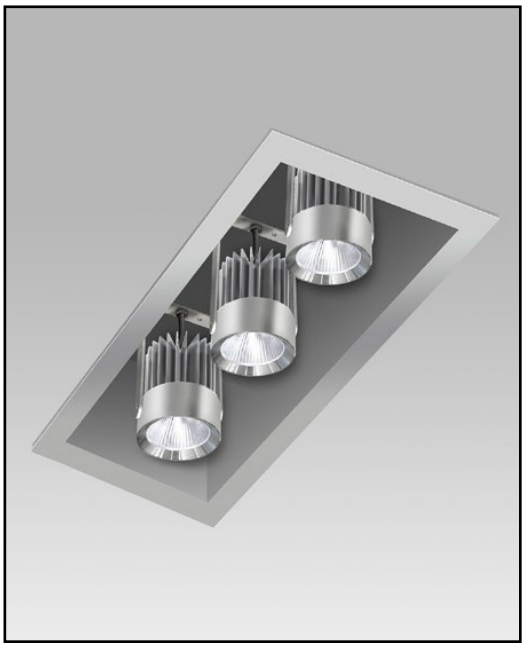

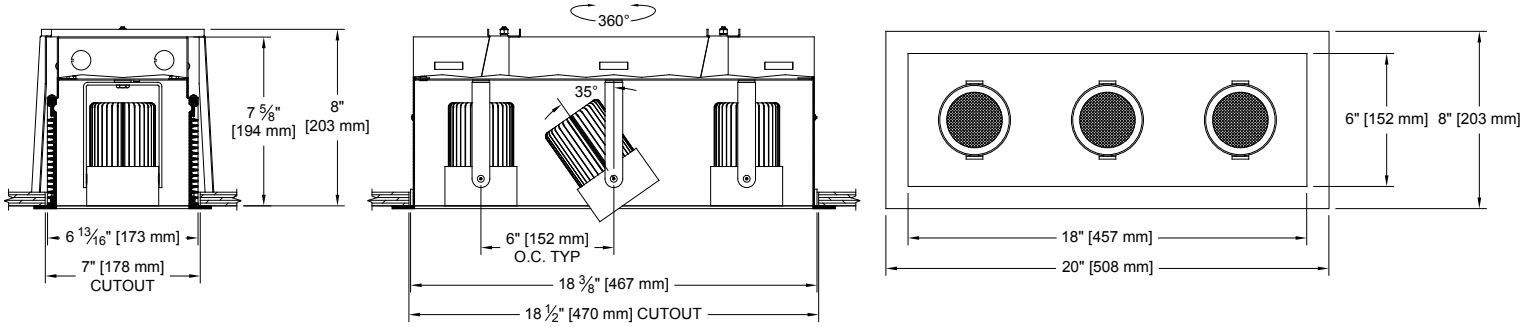

ORDERING INFORMATION

1005-3LEDZ-FH-VHO	SOURCE / DRIVER	BEAMSPREAD	TRIM / FINISH	LAMP LENS	ACCESSORIES
	/		/		
Flanged Housing **9** = 90+CRI **27** = 2700K **30** = 3000K **35** = 3500K **40** = 4000K	**CZ14**=120-277v, 14W 1450lm **CZ20**=120-277v, 20W 2000lm **CZ28***=120-277v, 28W 2675lm **C1** =0-10V dimming, 1%, 120-277v **C2** =TRIAC/ELV 2-wire, 1% 120v (Lead/Trail Edge) **E1** =EldoLED 0-10V Logarithmic Dim, 0.1%, 120-277v **E2** =EldoLED DALI, 0.1%, 120-277v **E3** =EldoLED 0-10V Linear Dim, 0.1%, 120-277v **L2** =Ltrn Hi-lume 1% 2-wire LED driver (120v forward phase) **LTB** =Lutron Hi-lume 1% EcoSys LED driver, 1%, 120-277v, Soft-on, Fade-to-Black	**10** = 10 Degrees **20** = 20 Degrees **30** = 30 Degrees	**P14** = White **BLK**=Black **ANA** = Clear Aluminum **CST** = Custom	**Blank** = None **79A**=Veiling Acrylic **91A** = Solite **93A** = Frosted	**97L** = Black Hexcell

Contact Factory to request separate cutsheet

SpecialtyLighting

www.specialtylightingindustries.com
1306 Doris Avenue, Ocean, NJ 07712 USA
800.462.7812 732.517.0800 FAX:732.517.0971